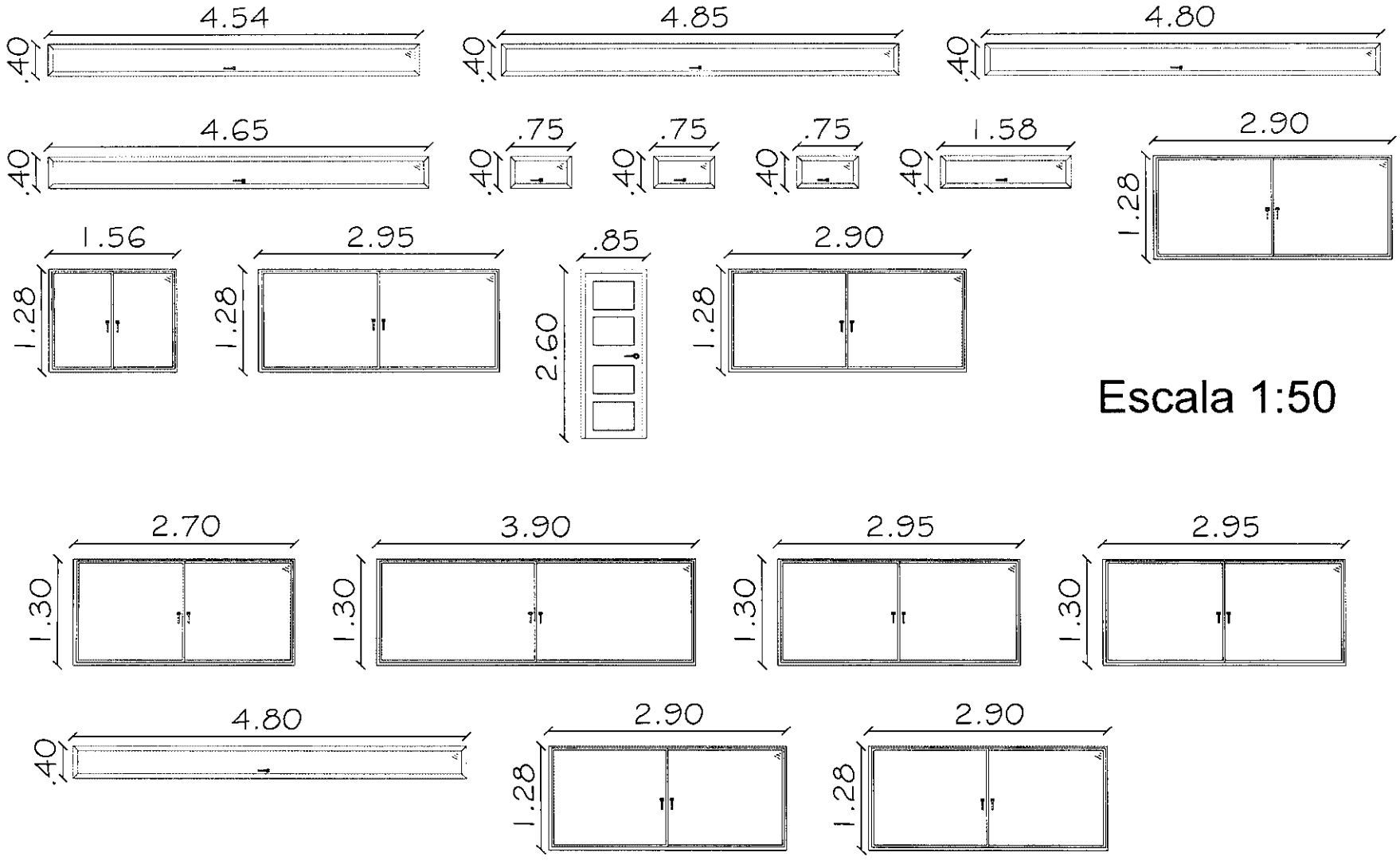
4.54
.40
4.85
.40
4.80
.40
4.65
.40
.75
.40
.75
.40
.75
.40
1.58
.40
2.90
1.28
1.56
1.28
2.95
1.28
.85
2.60
2.90
1.28
2.70
1.30
3.90
1.30
2.95
1.30
2.95
1.30
4.80
.40
2.90
1.28
2.90
1.28

Escala 1:50